THIS KIND OF EXTRA ROOM AND COMFORT

DOESN'T TAKE A BACK SEAT TO ANYTHING.

The International® cab is the industry's most spacious, quiet and comfortable – designed with one-piece door frames and an automotive style, fit and finish. Every extended and crew cab is constructed of double-sided galvanized steel, and is built and installed at our assembly plant to deliver long-lasting reliability and durability.

The optional extended cab and crew cab allows additional passengers to enjoy the ride in equal comfort. They're ideal for applications like construction, utility, recovery and fire service that require additional seating for crews and other passengers.

Only International gives you the industry's best cab. And then some.

International® 4300

International® 7400

International® 4200

International® 4200

International® 8600

THE MOST COMFORTABLE, QUIET AND SPACIOUS CAB. AND WE'VE GOT ROOM TO TALK.

Built to satisfy drivers, passengers, owners and maintainers.

- Double-sided galvanized steel conventional cab offers superior strength and durability.
- One-piece roof section, +/- 1mm assembly tolerances and an abundance of insulation and sealing create a tight, solid, quiet and comfortable cab environment.
- A three-step E-Coat prime/base coat/urethane clear coat paint process offers outstanding resistance to corrosion and fading, and is backed by a five-year limited cab warranty.
- Large space under the rear seat offers additional storage.
- Three-piece hood is less expensive to repair than single-piece hood. Breakaway mirror design reduces mirror and door damage in the event of minor impact.
- Powder-coated paint on steps, fuel tanks and mirror brackets resists chips and scratches.
- The optional dashboard wing switch panel makes switches easy to see and reach.

International® extended cab.

- 26" (66 cm) extended cab with 133" (338 cm) BBC. Optional cloth or vinyl forward-facing rear bench seats. (International 4000 and 7000 Series models only.)
- Easy rear access through a roomy path between the front seats.
- Rear swing-out windows provide added ventilation and enhanced visibility.

International® 7000 and 8000 Series trucks offer an extended cab and bunk option featuring a 72 1/2"L x 26"W (184 cm x 66 cm) x 5"-thick foam mattress. The bunk lifts up a full 75º for easy access to over 9 cubic feet of usable storage space.

International® crew cab.

- Four-door cab design features well-placed offset steps with three-point entry system, allowing easy entry and egress for both front and rear seat passengers.
- Rear cab air suspension provides an extraordinarily smooth ride for added passenger comfort and longer cab life. Standard on all International® 7000 Series cabs and the International® 4000 Series crew cab.
- Wide rear cab doors open a full 85º.
- Up to six-person crew cab with 150.9" (383 cm) BBC.
- Rear door height 58" (147 cm).
- Door width 40" (102 cm).

International® Extended Cab and Crew Cab Standard Equipment Specifications

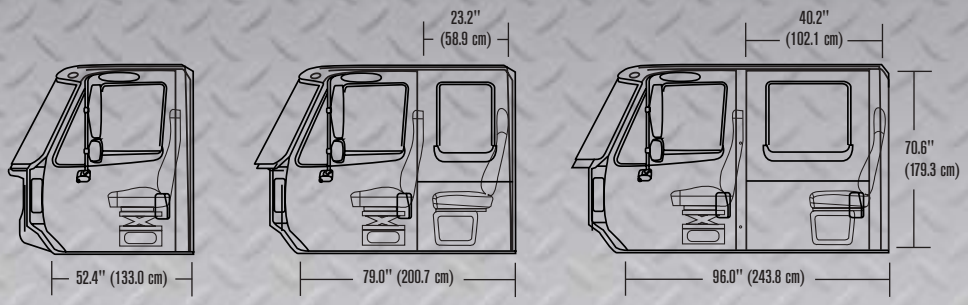

Standard Cab Extended Cab Crew Cab

Description	Dimension		
	Regular Cab	Extended Cab	Crew Cab
Shoulder Room	70.6" (179.3 cm)	70.6" (179.3 cm)	70.6" (179.3 cm)
Inside Height	56.8" (144.3 cm)	56.8" (144.3 cm)	56.8" (144.3 cm)
Steering Wheel to Seat Back (Maximum)	18.2" (46.2 cm)	18.2" (46.2 cm)	18.2" (46.2 cm)
Driver Seat Track Travel	Fixed Seat: 7.9" (20.0 cm) fore/aft Air Suspension Seat: 7.4" (18.8 cm) fore/aft		
Rear Seat Width	–	65.0" (165.1 cm)	65.0" (165.1 cm)
Rear Seat Spacing	–	23.2" (58.9 cm)	40.2" (102.1 cm)
Inside Length	52.4" (133.0 cm)	79.0" (200.7 cm)	96.0" (243.8 cm)

For more information on the International extended cab and crew cab, call 1-800-44-TRUCK (1-800-448-7825), see your International® dealer or visit our web site at www.InternationalDelivers.com.

THE BRILLIANCE OF COMMON SENSE.™

Specifications, descriptions and illustrative material in this literature are as accurate as known at time of publication, but are subject to change without notice. Illustrations may include optional equipment and accessories, and may not include all standard equipment. THE BRILLIANCE OF COMMON SENSE. is a trademark of International Truck and Engine Corporation. International and the International Diamond logo are registered trademarks of International Truck and Engine Corporation.

©2003 International Truck and Engine Corporation, Warrenville, IL 60555

AD-44208G-1 Lithographed in the United States of America